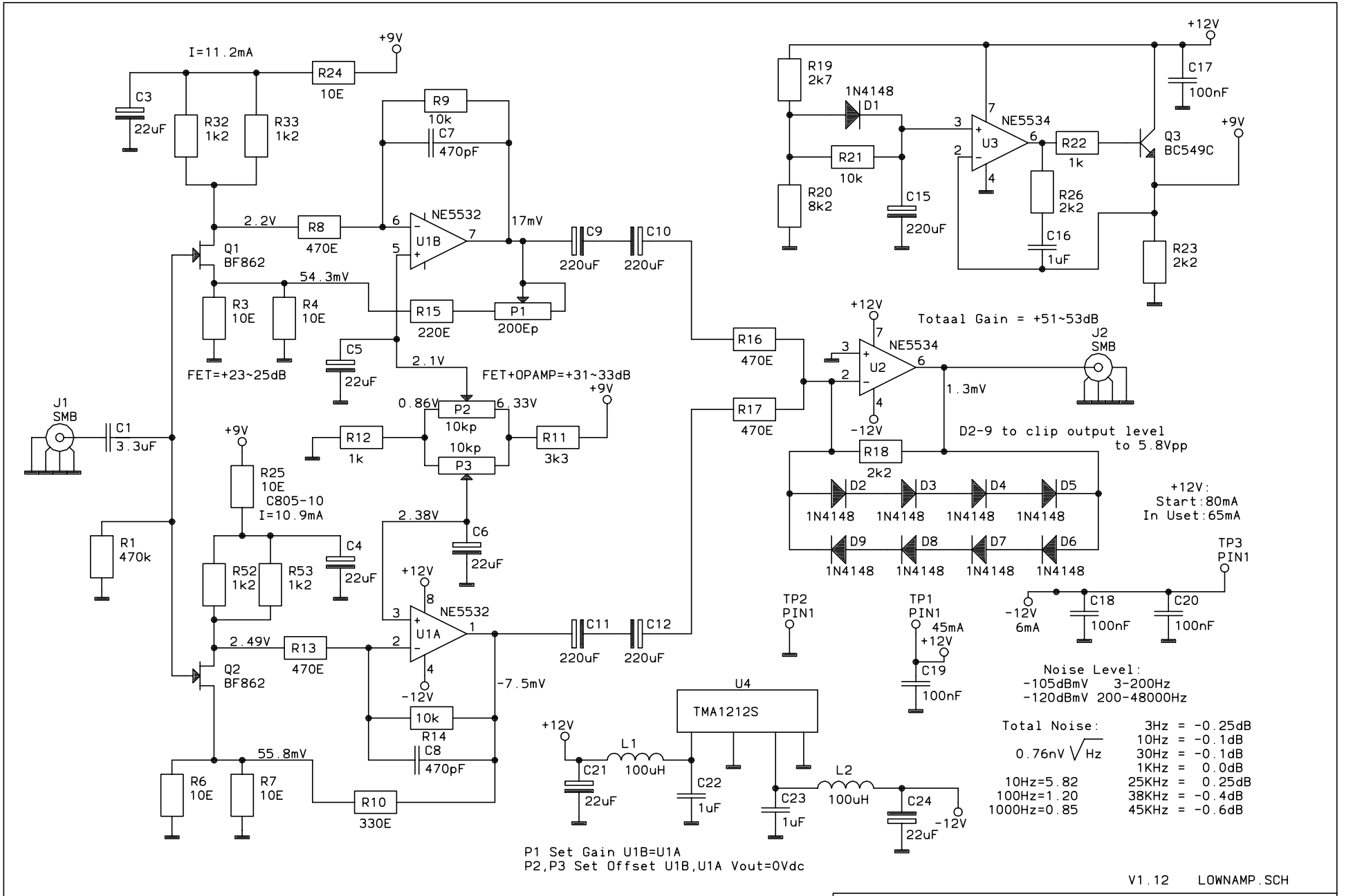


| | | |
|---|---|---|
| T.Lampe - PE1FOD | | |
| Size A | Document Number<br>Low Noise LF Amp | REV |
| Date: November 28, 2018 | Sheet 1 of 1 | |