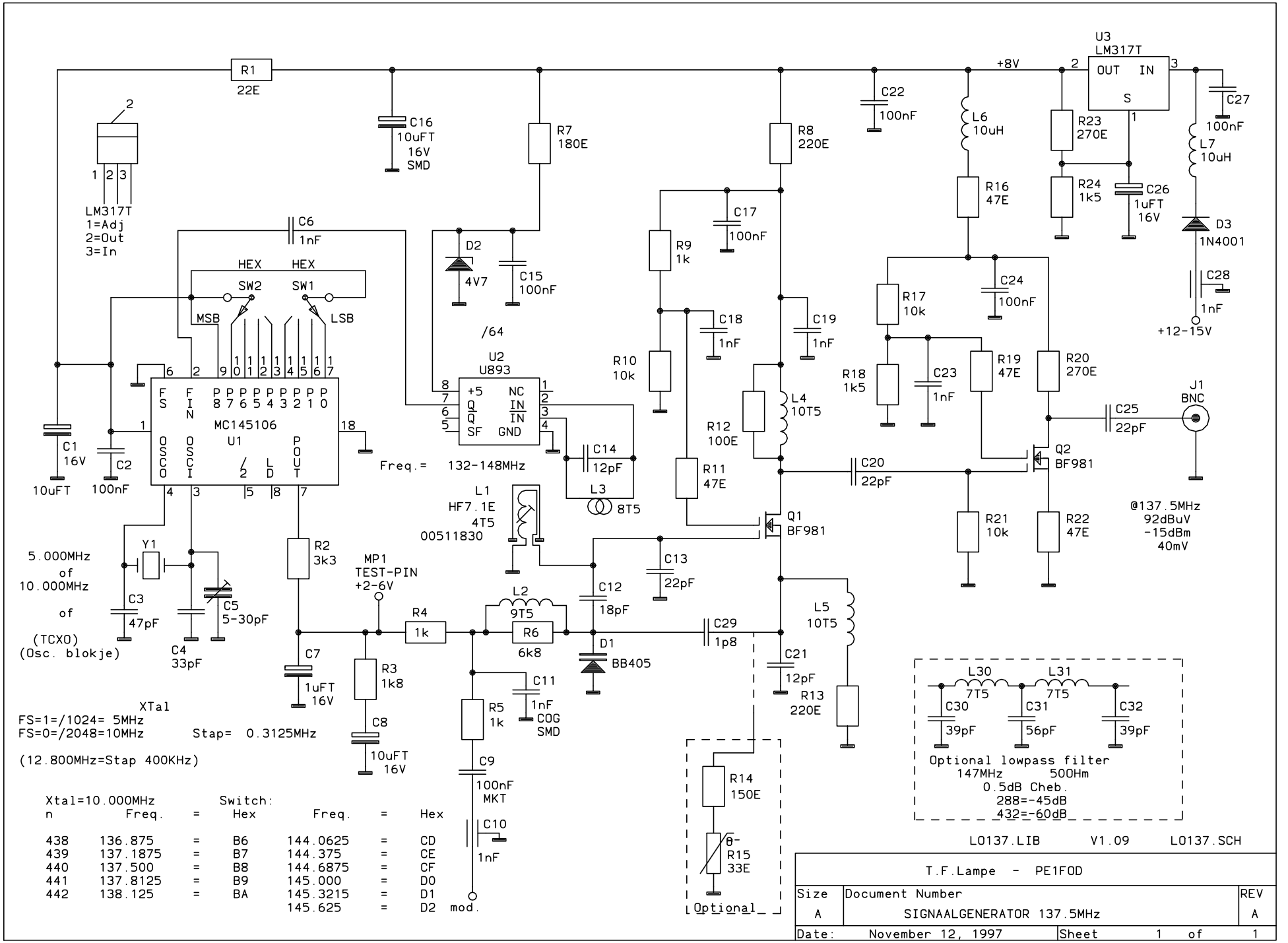
R1
22E
C16
10uFT
16V
SMD
R7
180E
R8
220E
C22
100nF
+8V
U3
LM317T
OUT
IN
S
C27
100nF
L6
10uH
R23
270E
L7
10uH
R16
47E
R24
1k5
C26
1uFT
16V
D3
1N4001
C28
1nF
+12-15V
LM317T
1=Adj
2=Out
3=In
C6
1nF
HEX
HEX
SW2
SW1
MSB
LSB
D2
4V7
C15
100nF
/64
U2
U893
+5
NC
Q
IN
Q
IN
SF
GND
R9
1k
C17
100nF
C18
1nF
C19
1nF
R10
10k
R17
10k
C24
100nF
R18
1k5
C23
1nF
R19
47E
R20
270E
J1
BNC
C25
22pF
Q2
BF981
C20
22pF
R12
100E
L4
10T5
R11
47E
Q1
BF981
R21
10k
R22
47E
@137.5MHz
92dBuV
-15dBm
40mV
MC145106
U1
FS
FIN
P8
P7
P6
P5
P4
P3
P2
P1
P0
OSCO
OSCI
/2
LD
POUT
C1
16V
10uFT
C2
100nF
Freq.= 132-148MHz
C14
12pF
L3
8T5
L1
HF7.1E
4T5
00511830
C13
22pF
5.000MHz
of
10.000MHz
of
(TCXO)
(Osc. blokje)
Y1
C3
47pF
C4
33pF
C5
5-30pF
R2
3k3
MP1
TEST-PIN
+2-6V
R4
1k
L2
9T5
R6
6k8
C12
18pF
C29
1p8
L5
10T5
C7
1uFT
16V
R3
1k8
D1
BB405
C21
12pF
R13
220E
C11
1nF
COG
SMD
R5
1k
C8
10uFT
16V
C9
100nF
MKT
C10
1nF
mod.
XTal
FS=1=/1024= 5MHz
FS=0=/2048=10MHz
Stap= 0.3125MHz
(12.800MHz=Stap 400KHz)
Xtal=10.000MHz
Switch:
n Freq. = Hex Freq. = Hex
438 136.875 = B6 144.0625 = CD
439 137.1875 = B7 144.375 = CE
440 137.500 = B8 144.6875 = CF
441 137.8125 = B9 145.000 = D0
442 138.125 = BA 145.3215 = D1
145.625 = D2
R14
150E
R15
33E
Optional
L30
7T5
L31
7T5
C30
39pF
C31
56pF
C32
39pF
Optional lowpass filter
147MHz 50OHm
0.5dB Cheb.
288=-45dB
432=-60dB
L0137.LIB V1.09 L0137.SCH
T.F.Lampe - PE1FOD
Size
A
Document Number
SIGNAALGENERATOR 137.5MHz
REV
A
Date: November 12, 1997
Sheet 1 of 1